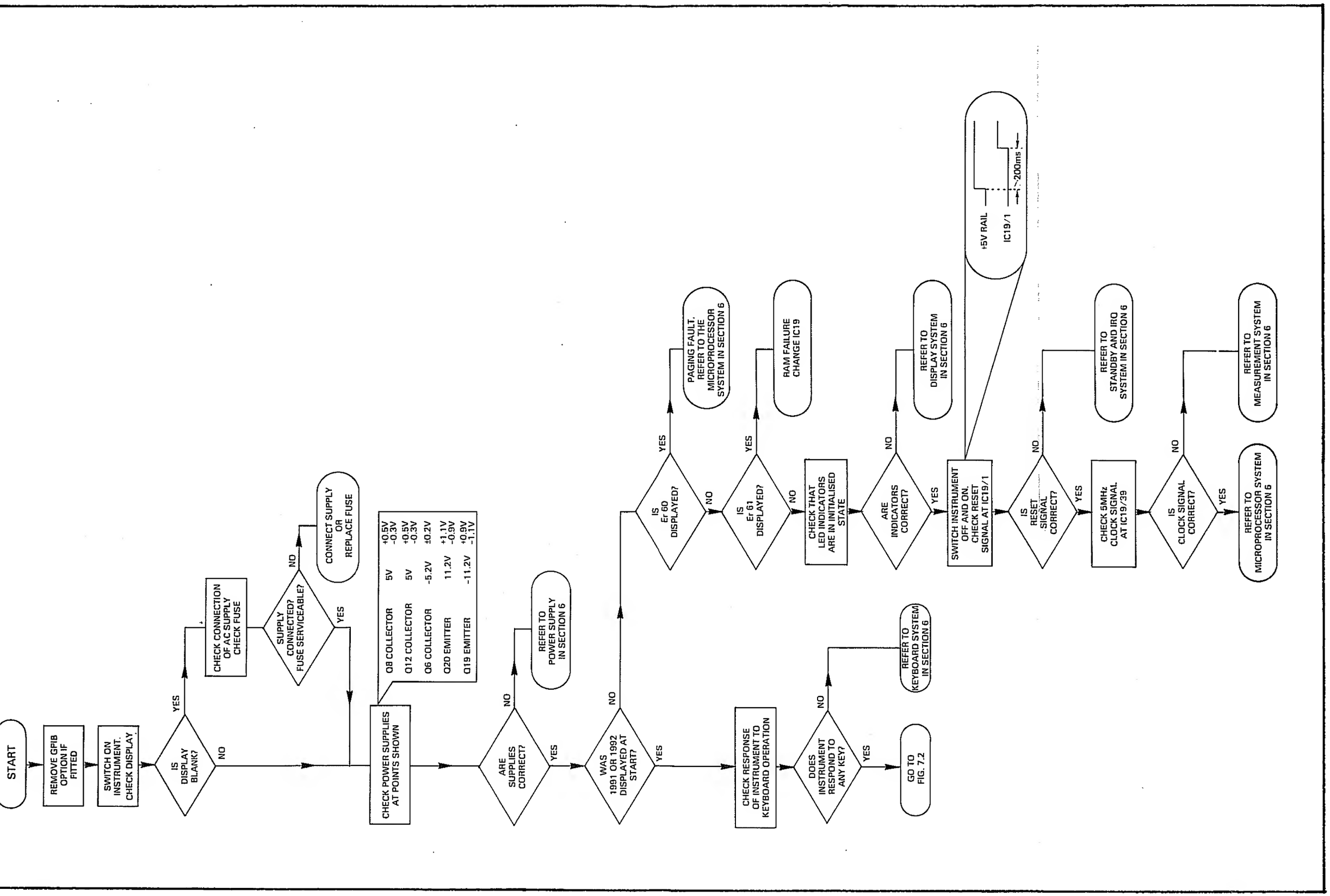

Fig 7.1 Fault Finding Flowchart - Part 1

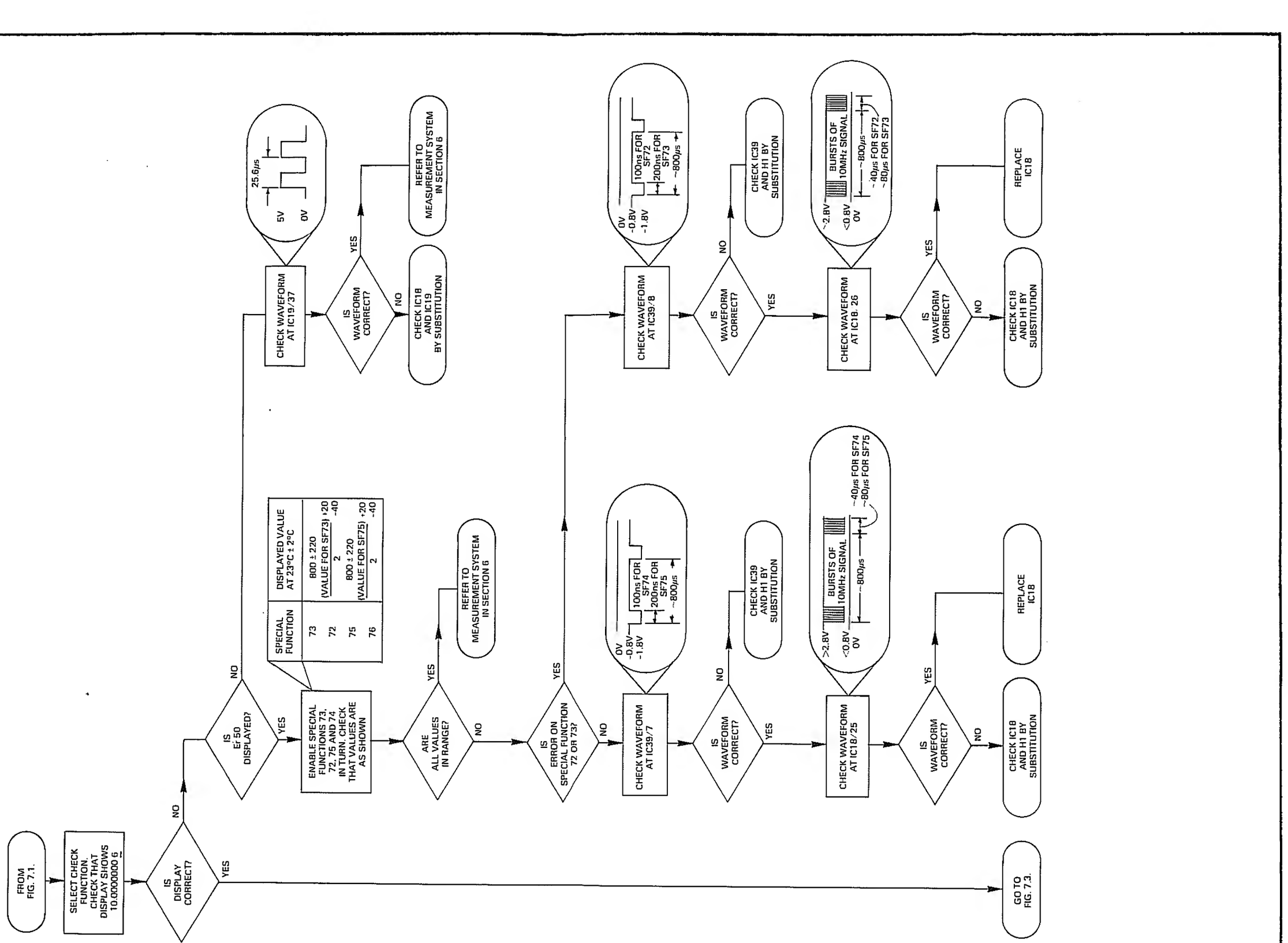

Fig 7.2 Fault Finding Flowchart - Part 2

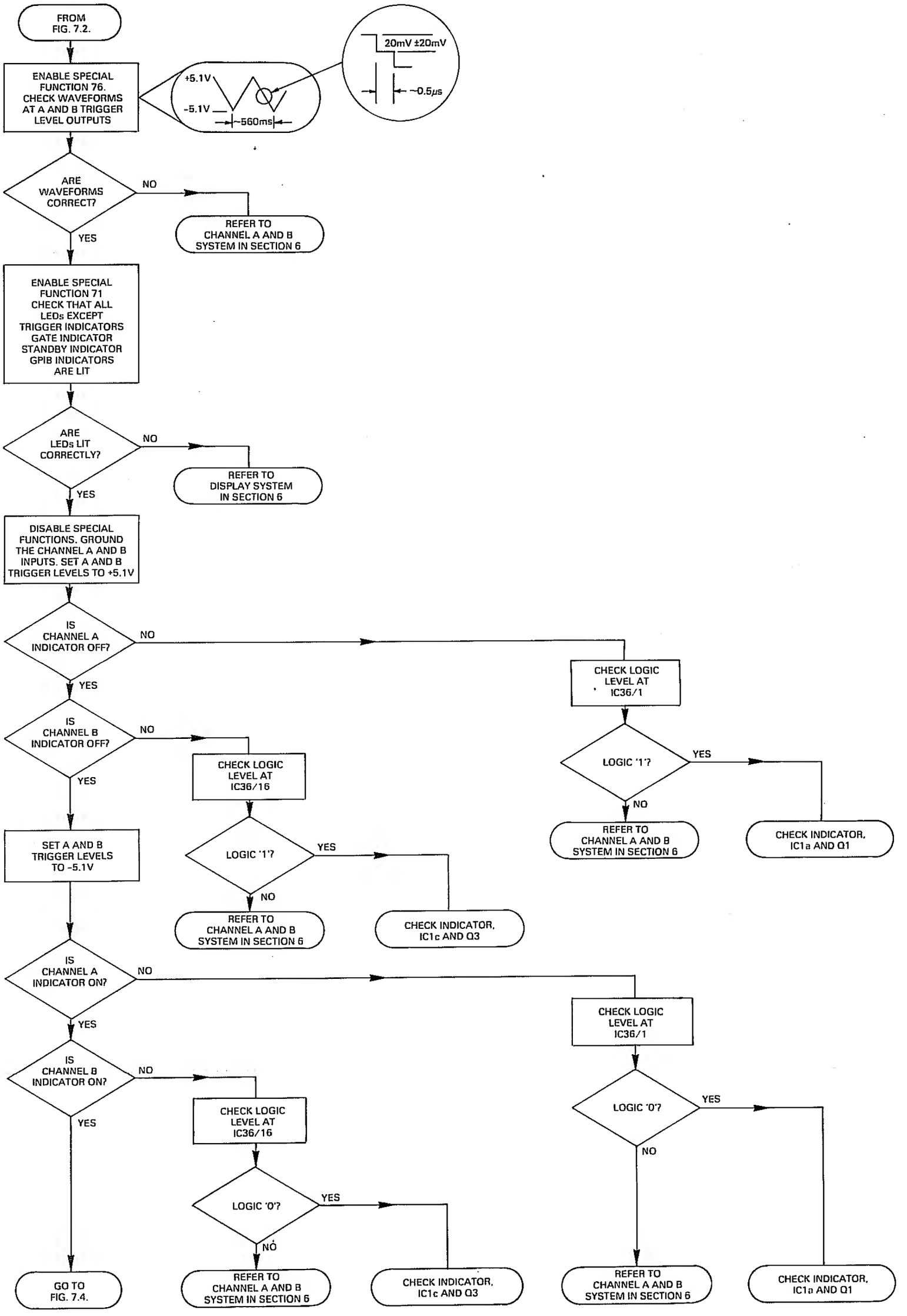

Fig 7.3 Fault Finding Flowchart - Part 3

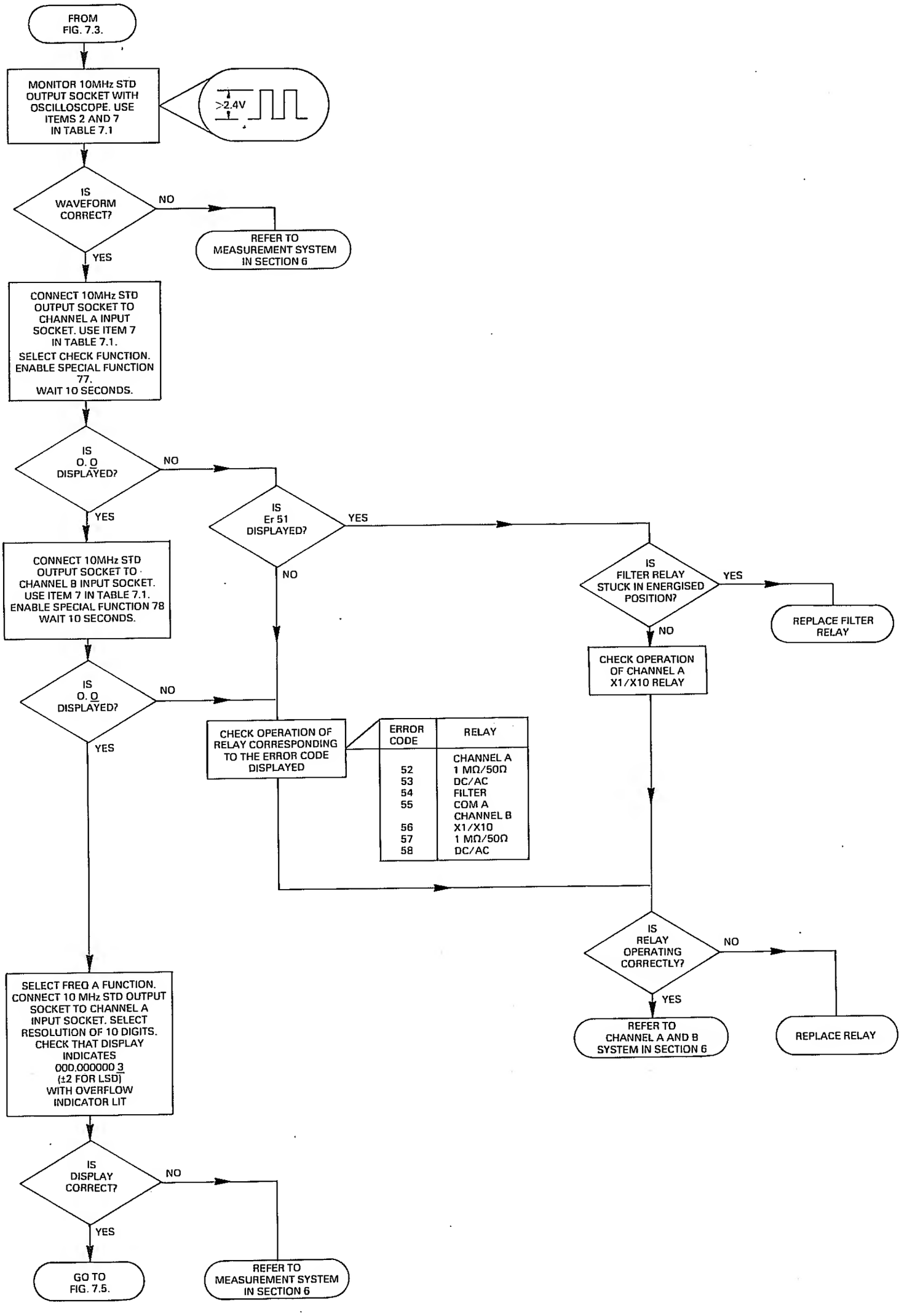

Fig 7.4 Fault Finding Flowchart - Part 4

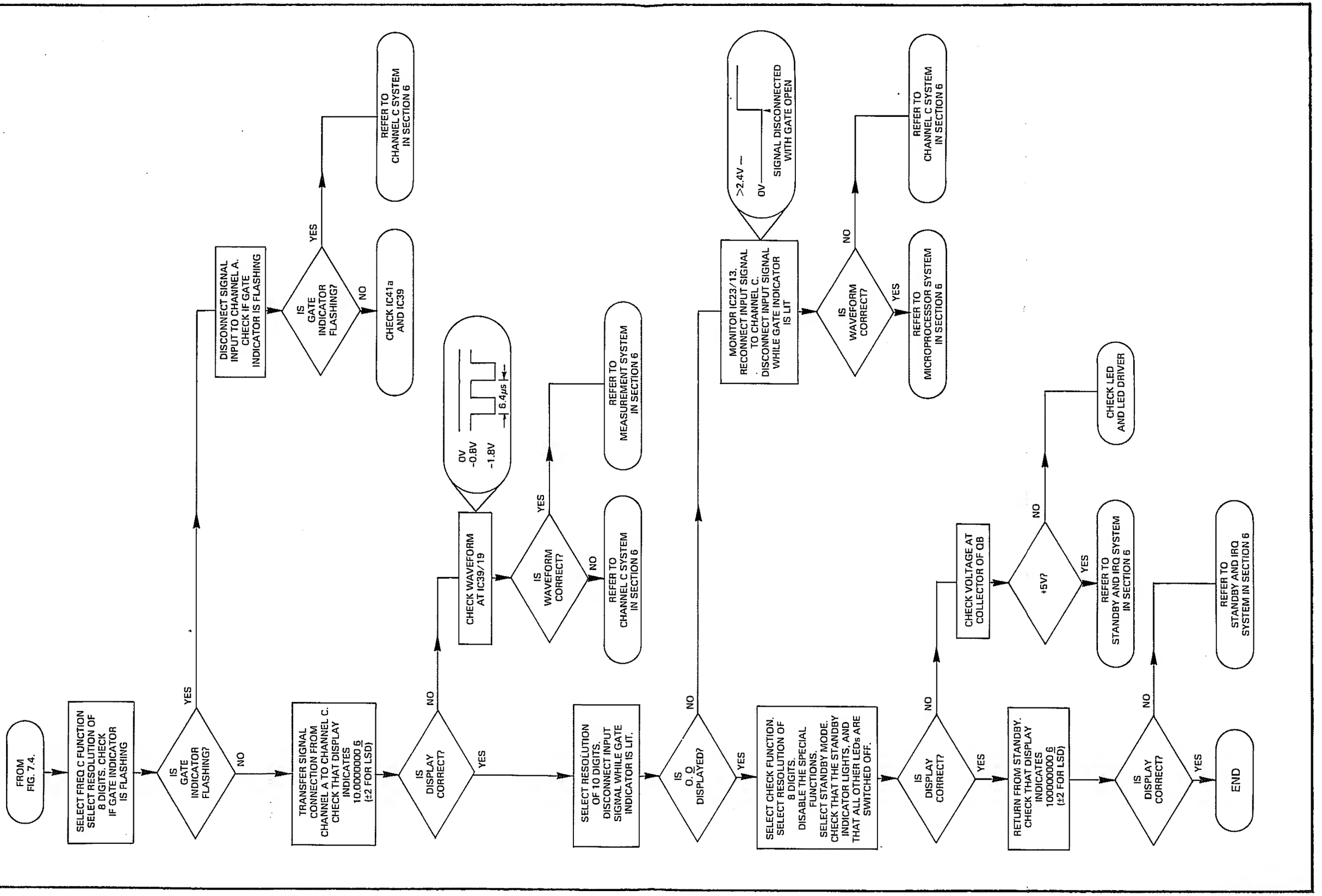

Fig 7.5 Fault Finding Flowchart - Part 5

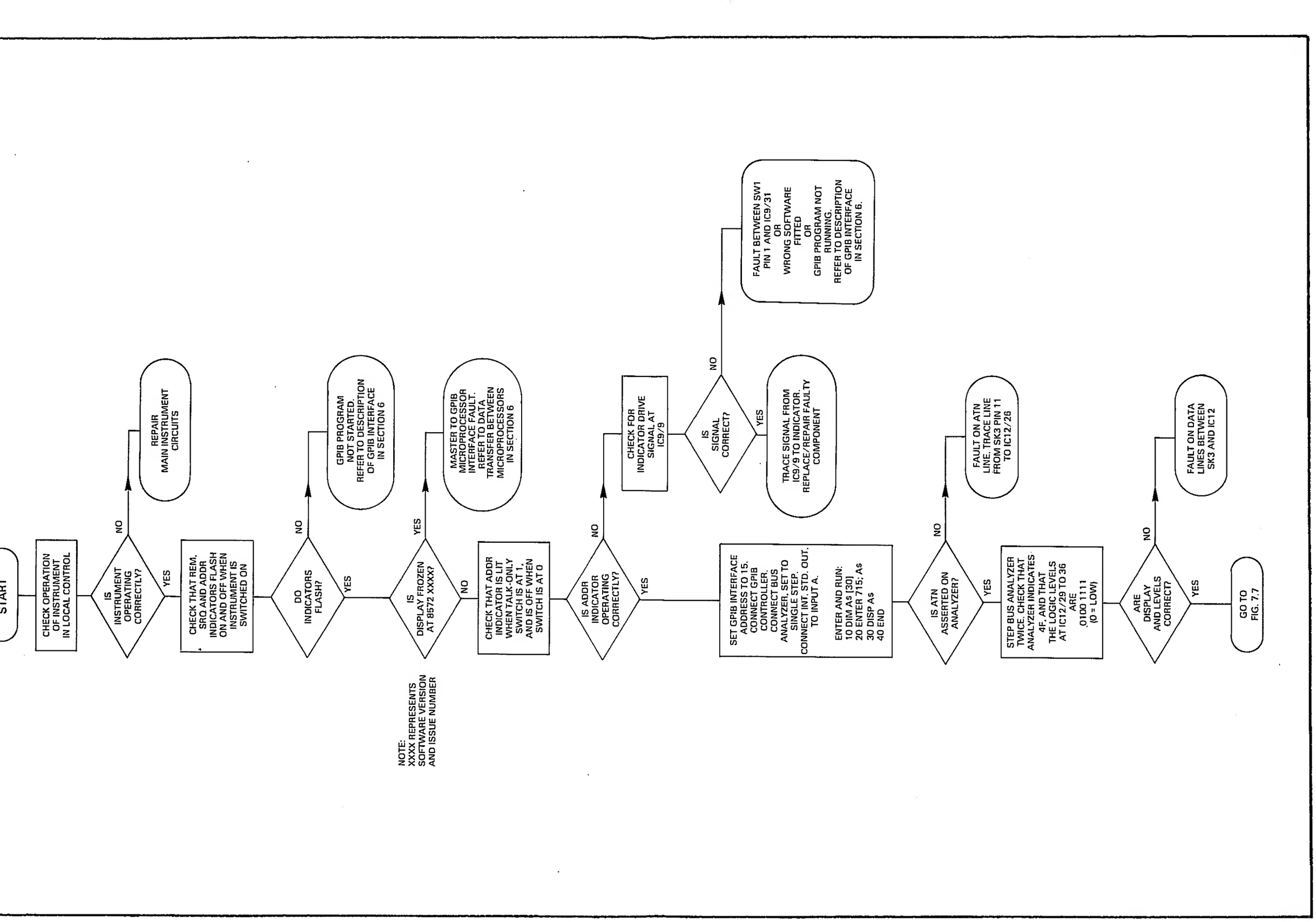

Fig 7.6 Fault Finding Flowchart - GPIB Part 1

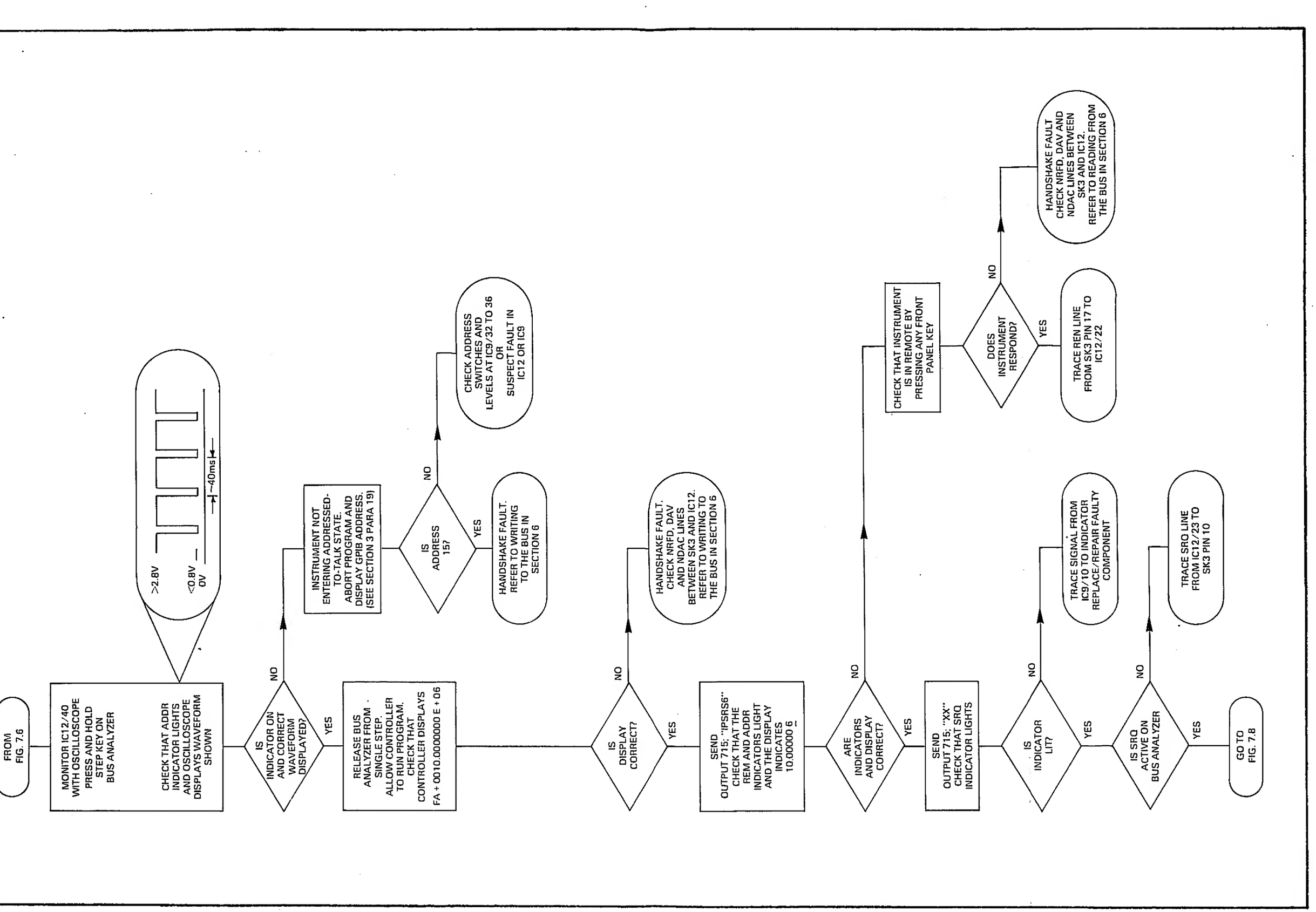

Fig 7.7 Fault Finding Flowchart - GPIB Part 2

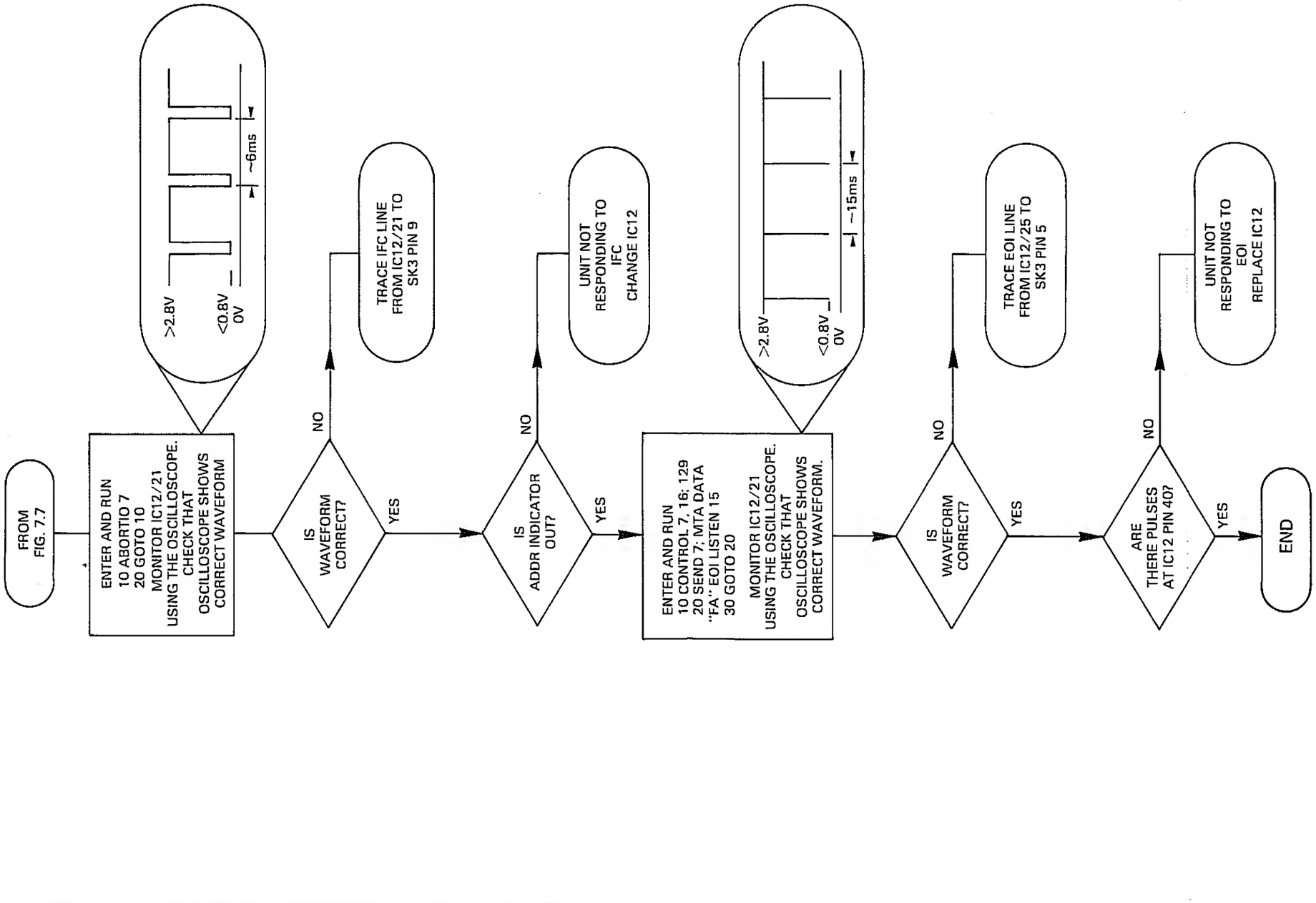

Fig 7.8 Fault Finding Flowchart - GPIB Part 3

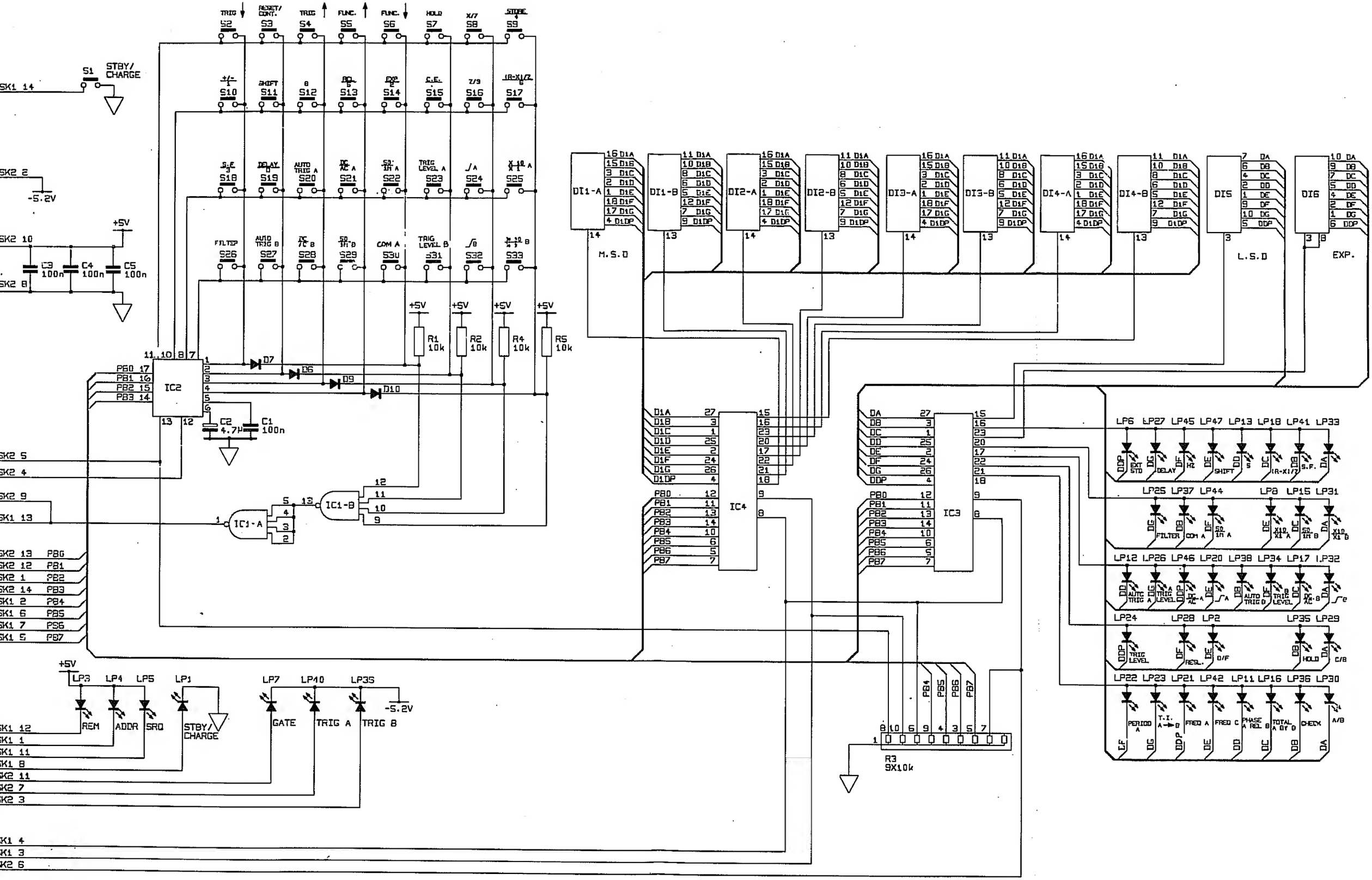

Circuit Diagram:
Display Board Assembly 19-1141 Fig.3

TRACKSIDE VIEW

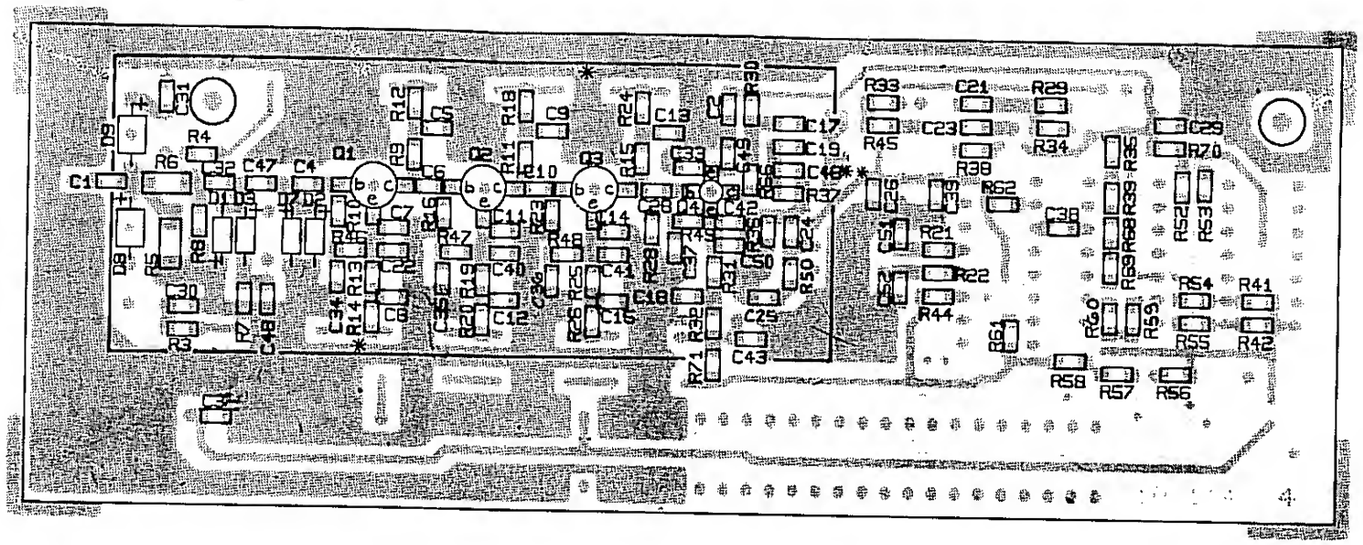
R33
C21
R29
C23
R45
R34
C29
R70
R38
R62
C26
C39
C38
C51
R21
R22
C52
R44
B61
R58
R57
R56
R60
R59
R55
R54
R41
R42
R52
R53
R69
R68
R39
R35
C17
C19
C40
R37
C42
C24
R50
C43
R71
R72
C25
C18
C16
C15
C41
C40
C12
C8
C34
C35
R14
R13
R20
R19
R25
R28
R27
R48
R47
C11
C10
C9
R18
R12
R24
C13
C36
R15
C20
C6
C7
R16
R17
R9
R11
D1
D2
D3
C4
C47
R6
R4
C1
D9
D8
R8
R30
R3
C48
C32
C31
R31
R32
R26
R46
R49
R50
R51
R52
R53
R54
R55
R56
R57
R58
R59
R60
R61
R62
R69
R68
R39
R35
R70
C29
C23
C21
R33
R29
R34
R38
R45
C17
C19
C40
R37
C42
C24
C43

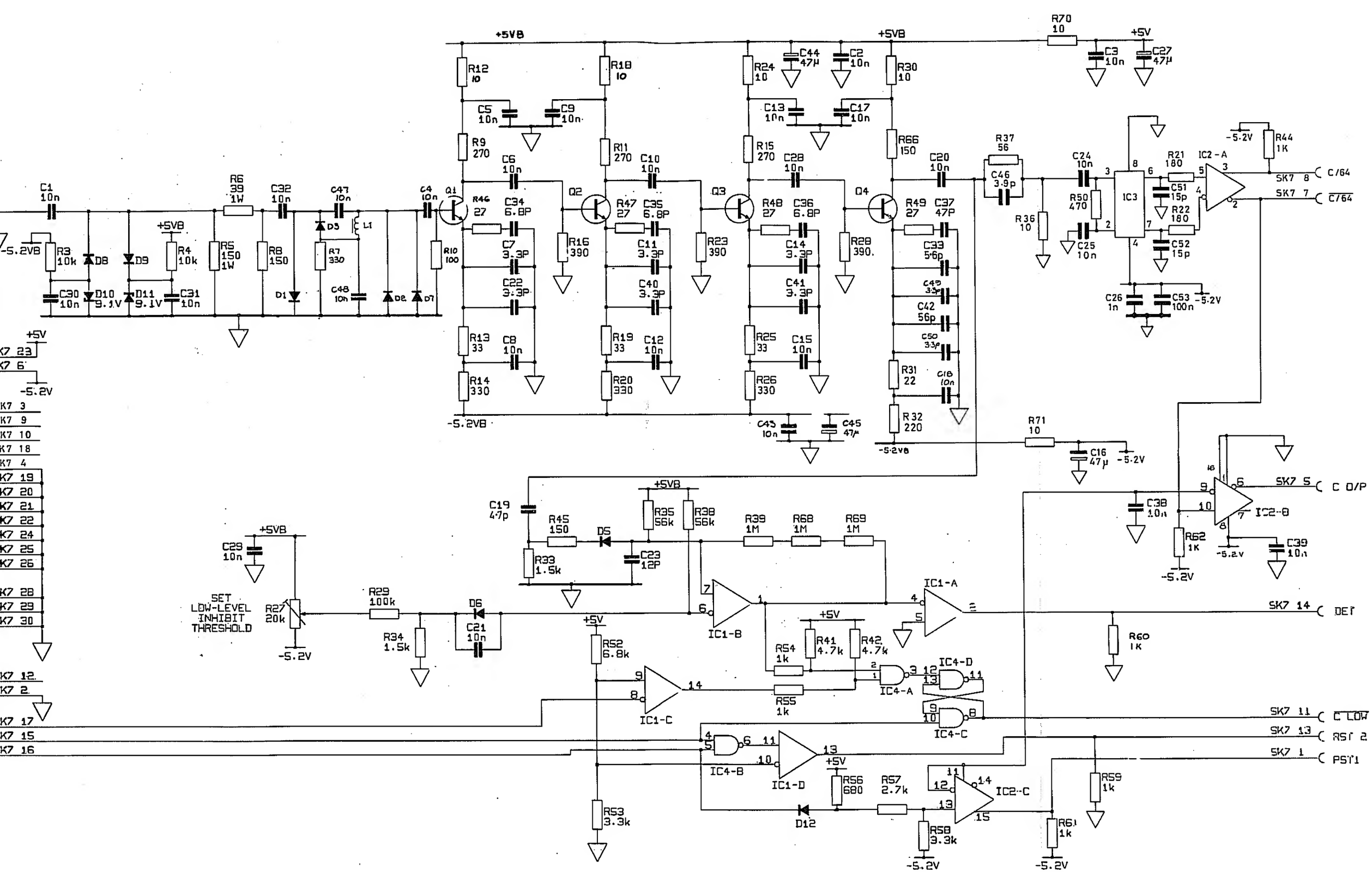

Circuit Diagram :
Channel C Assembly 19-1142 Fig. 5

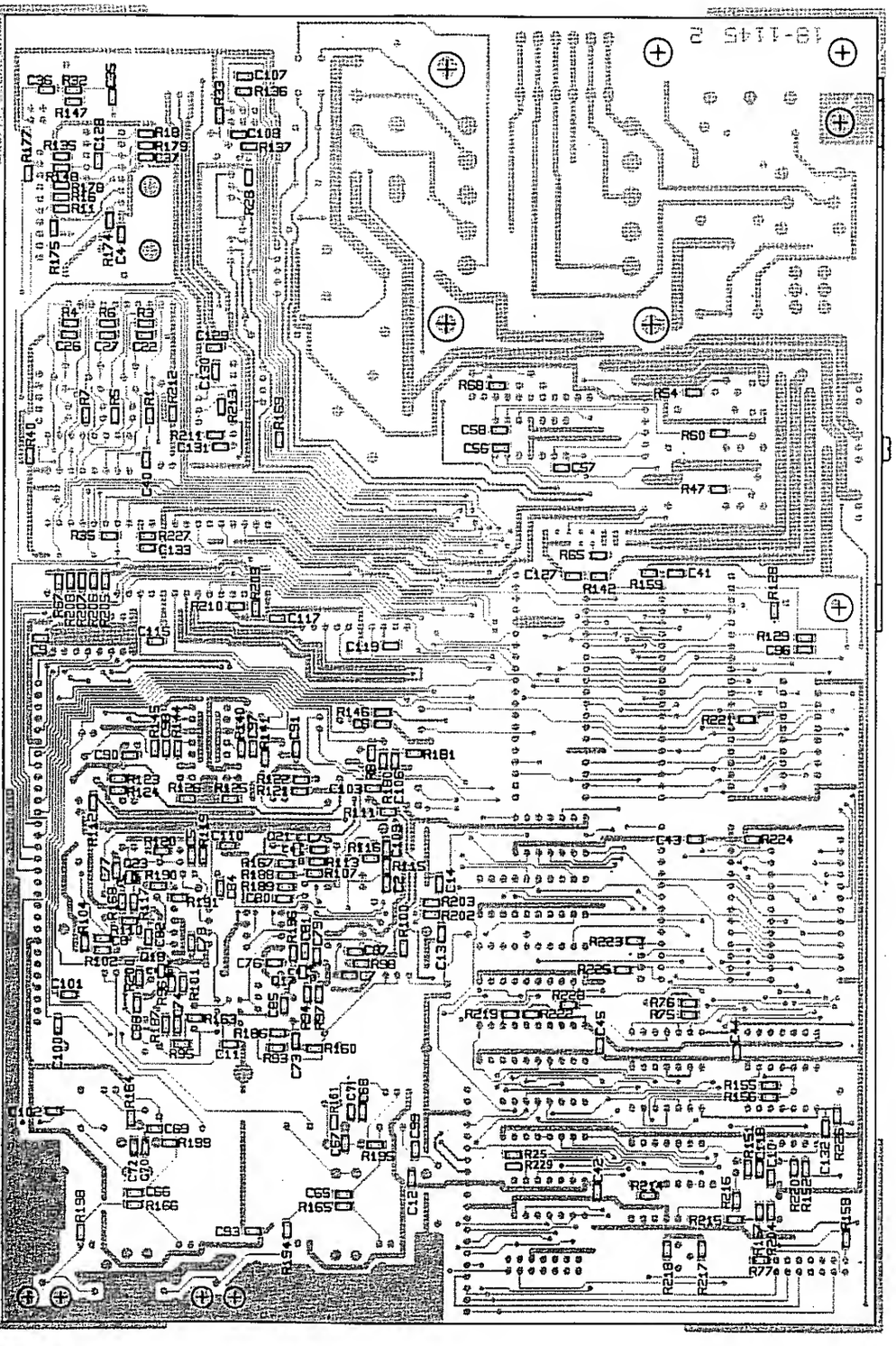

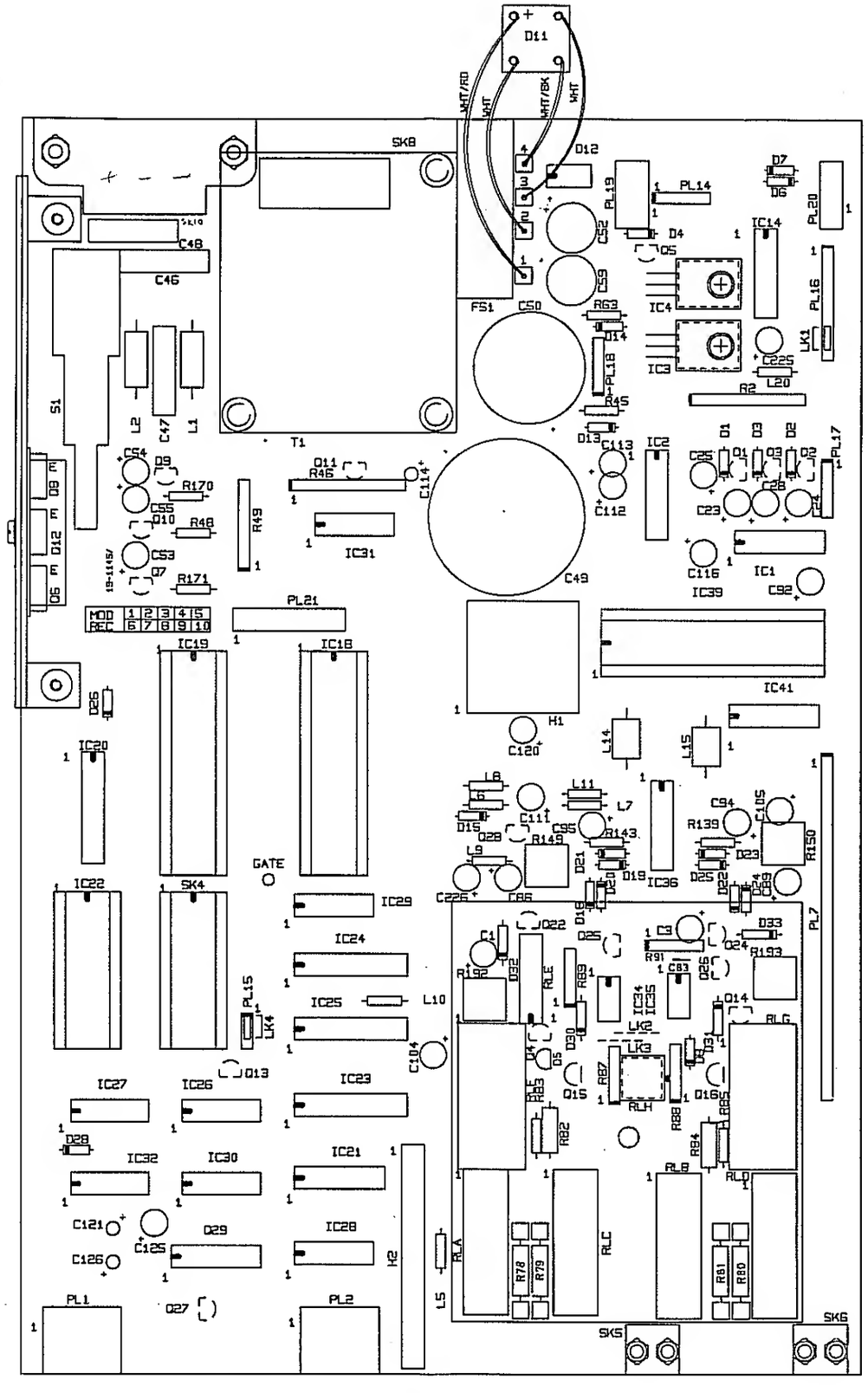

RACAL
TH 6428
2 4

Component Layout:
Motherboard Assembly 19-1145 Fig-6

SK5
I/PA
RLA1
R165 100
R194 10
C65 20n
R195 22
RB2 900K
RLF1
C67 6·8p
R161 68
C71 2·7p
C68 47p
R83 111K
RLC1
R78 100
R79 100
RB7 514K 476K 10K
RLH1
RLH2
SK6
I/PB
RLB1
R166 100
R198 10
C66 20n
R199 22
RB4 900K
RLG1
C69 6·8p
R164 68
C72 3·9p
C70 47p
R85 111K
RLD1
R80 100
R81 100
RB8 514K 476K 10K
C73 100p
R160 100
R93 560K
R186 560K
Q15
D5
-11·2vB
R94 180
R97 330
Q17
D30 2·7v
R111 10
+11·2vB
C85 10n
C86 47µ
R196 180
C75 10n
C79 33n
RLE1
C87 3·3n
R113 100
Q21
R107 1K
+11·2vB
R167 3·3K
IC34
Q25
'A' OFFSET NULL
R192 10K
R100 1·2K
C80 100n
R188 1K
R189 27K
RB9 10K 476K 514K
C76 10n
-11·2vB
Q4
Q22
R98 470
C7 10n
C1 47µ
C2 10n
D32 5·6v
R115 1K
R116 470
C109 10n
-11·2vB
+5vB
C94 47µ
C90 10n
+5v
R139 10
L15
R121 2·2K
D18
D19
D20
D21
R122 2·2K
-5·2vB
IC36a
R125 680
R140 100
C97 10n
R141 10K
R149 10K 'A' HYST SET
TO FIG 8 IC39 PIN 15
TO FIG 8 IC39 PIN 16
FIG 9 IC1 PIN 4.
R202 1K
C81 10n
C13 1n
R136 10K
C107 33n
PL19 5
'A' TRIG LEVEL TO REAR PANEL
TO FIG 8 H2 PIN 1
+11·2v
R112 10
+11·2v C
C88 10n
C89 47µ
D31 2·7v
C74 100p
R200 180
Q16
Q18
D8
-11·2vB
R96 180
R101 330
R163 100
R95 560K
R187 560K
C82 33n
R117 100
Q23
R110 1K
+11·2vC
R168 3·3K
IC35
Q26
'B' OFFSET NULL
R193 10K
R104 1·2K
C83 100n
R190 1K
R191 27K
RB1 10K 476K 514K
C78 10n
-11·2vB
Q14
Q24
R102 470
C8 10n
C3 47µ
C5 10n
D33 5·6v
R119 1K
R120 470
C110 10n
C111 47µ
C6 10n
R146 10
-11·2vB
-11·2v
C91 10n
47µ
-5·2vB
R143 10
L14
-5·2v
+5vB
R123 2·2K
D22
D23
D24
D25
R124 2·2K
-5·2vB
IC36b
R126 680
R144 100
C98 10n
R145 10K
R150 10K 'B' HYST SET
TO FIG 8 IC39 PIN 17
TO FIG 8 IC39 PIN 16 SHT. 3 IC1 PIN 12
R203 1K
C84 10n
C14 1n
R137 10K
C108 33n.
PL19 6
'B' TRIG LEVEL TO REAR PANEL
TO FIG 8 H2. PIN. 2
+5v
C93 10n
RLA
RLB
RLC
RLD
RLE
RLF
RLG
C226 47µ
C106 10n
R180 10K
Q28
R8 10
RLH 2
C11 10n
D15
R181 470
C99 10n
C100 10n
C101 10n
C102 10n
C103 10n
C104 47µ
C105 47µ
L5 100µ
L6 100µ
L7 100µ
L8 100µ
L9 100µ
L10 100µ
L11 100µ
TO FIG 8 C24. PINS. 2, 5, 6, 9, 12, 15, 16, 19.

Circuit Diagram :
Motherboard Assembly 19-1145 Fig 7

Circuit Diagram :
Motherboard Assembly 19-1145 Fig. 8

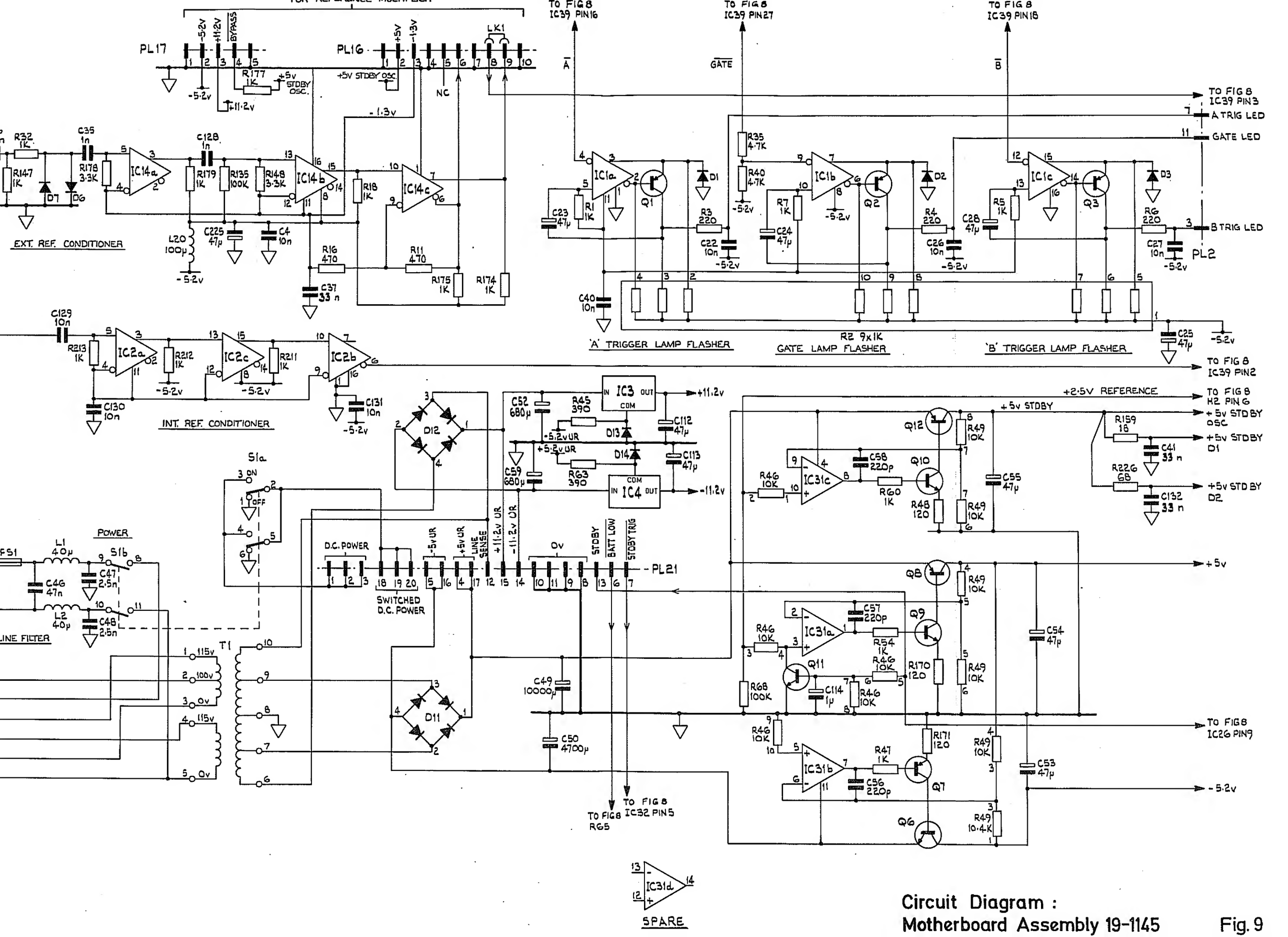
PL17
PL16
-5·2v
+11·2v
BYPASS
R177 1K
+5v STDBY OSC.
+5V STDBY OSC.
-1·3v
+5v
NC
LK1
TO FIG 8 IC39 PIN16
TO FIG 8 IC39 PIN27
TO FIG 8 IC39 PIN18
Ā
GATE
B̄
TO FIG 8 IC39 PIN3
A TRIG LED
GATE LED
B TRIG LED
PL2
TO FIG 8 IC39 PIN2
EXT. REF. CONDITIONER
INT. REF. CONDITIONER
'A' TRIGGER LAMP FLASHER
GATE LAMP FLASHER
'B' TRIGGER LAMP FLASHER
R2 9x1K
+2·5V REFERENCE
TO FIG 8 H2 PIN 6
+5v STDBY
+5v STDBY OSC
+5v STDBY D1
+5v STDBY D2
+5v
-5·2v
TO FIG 8 IC26 PIN9
TO FIG 8 IC32 PIN5
TO FIG 8 RG5
POWER
LINE FILTER
SPARE
Circuit Diagram :
Motherboard Assembly 19-1145
Fig. 9

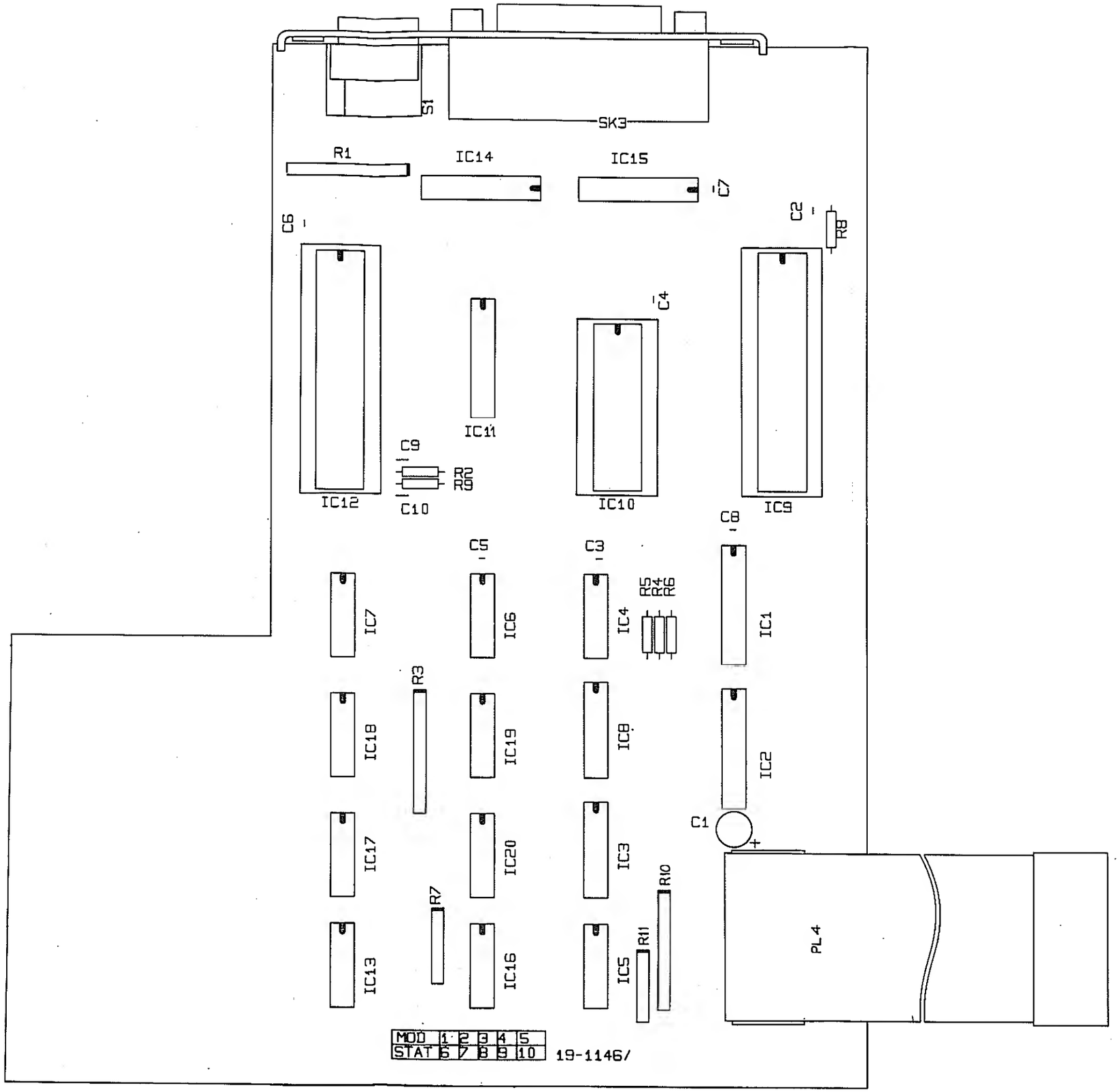

RACAL
TH6428
2

Component Layout :
GPIB Assembly 19-1146

Fig. 10

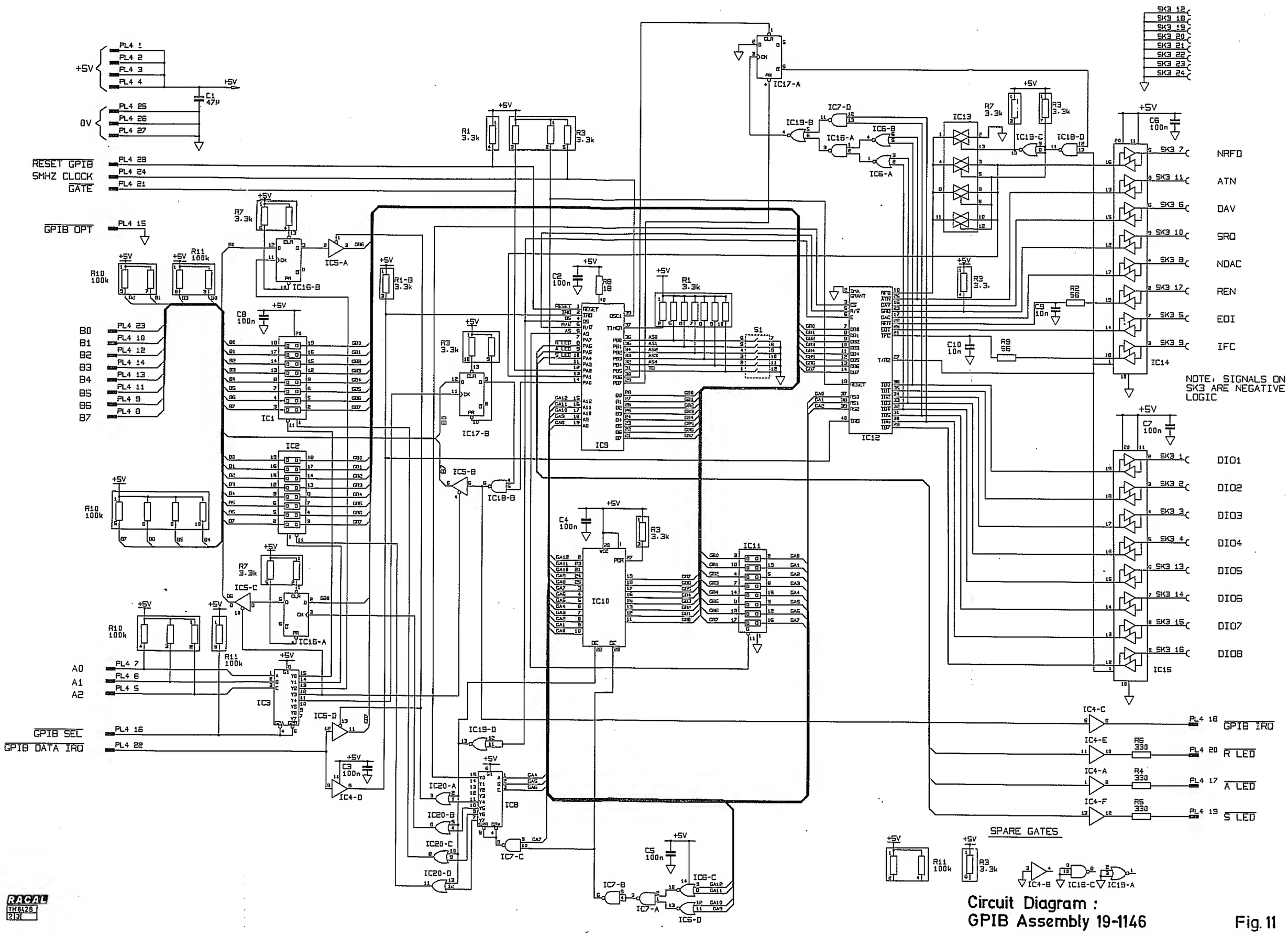

RACAL TH6428 2|3

Circuit Diagram : GPIB Assembly 19-1146

Fig. 11

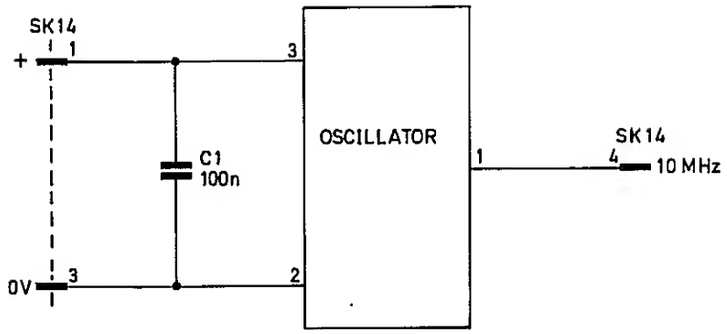

Circuit Diagram
Oscillator Assembly 19-1147

Fig.13

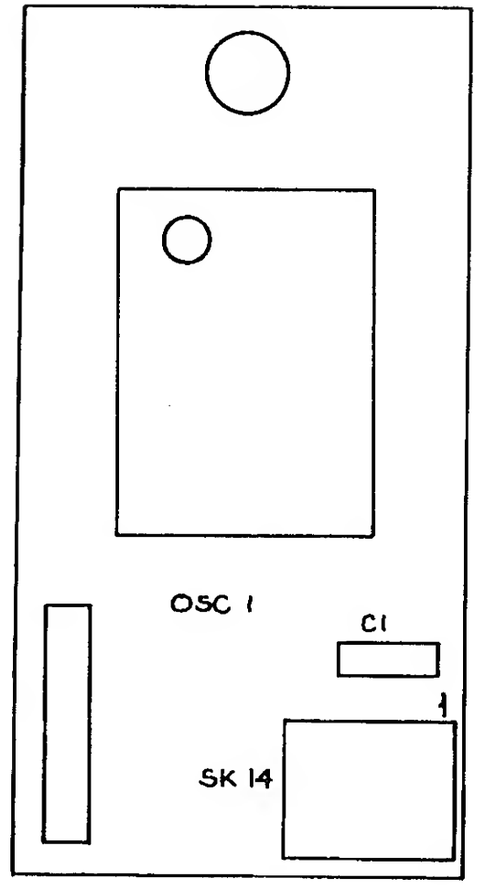

Component Layout:
Oscillator Assembly 19-1147

Fig.12

TRACKSIDE VIEW

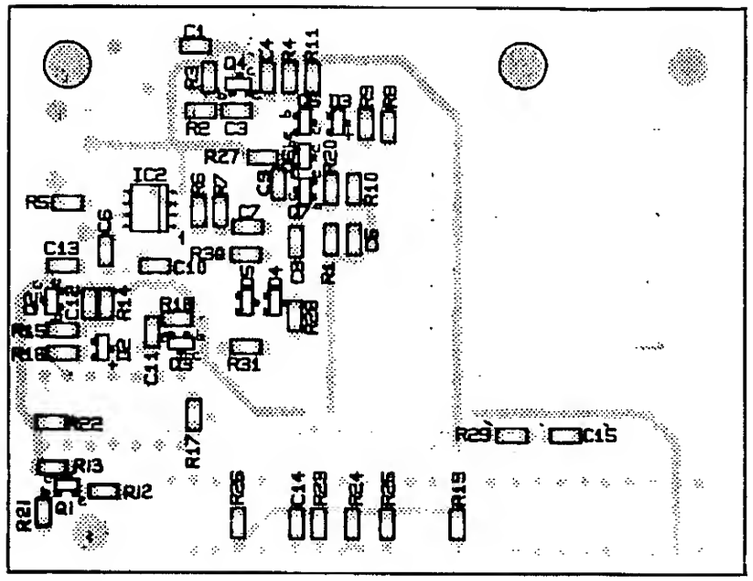

COMPONENT SIDE VIEW

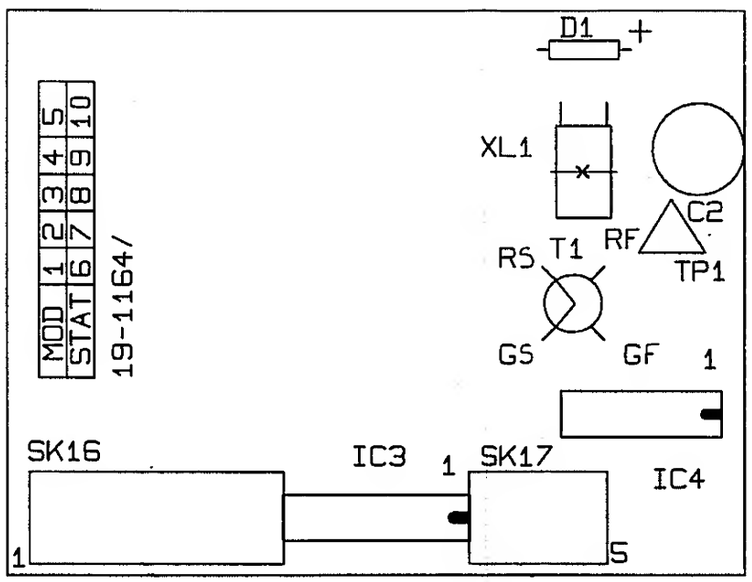

Component Layout : Reference
Frequency Multiplier Assembly 19-1164 Fig.14

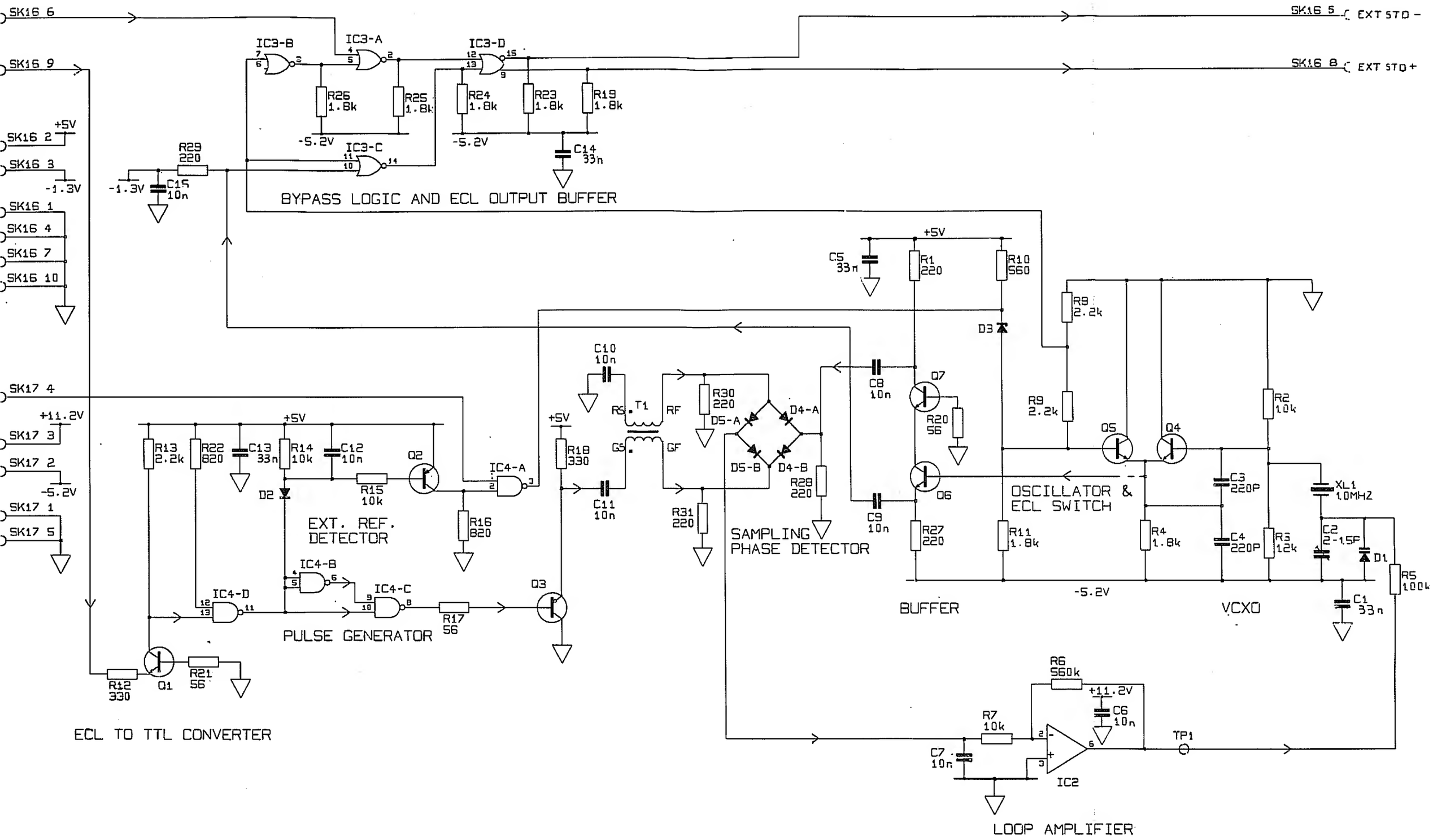

Circuit Diagram : Reference Frequency Multiplier Assembly 19-1164 Fig. 15

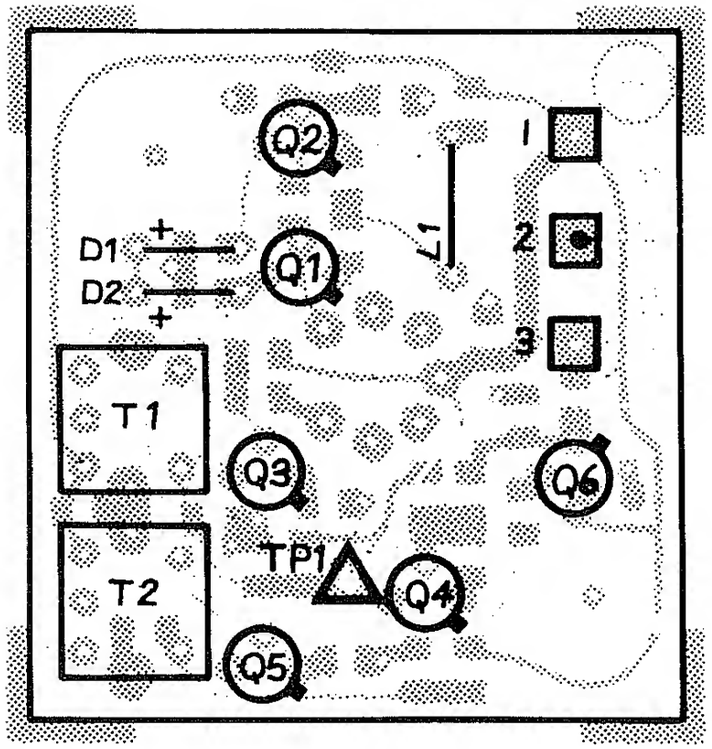

VIEWED FROM COMPONENT SIDE

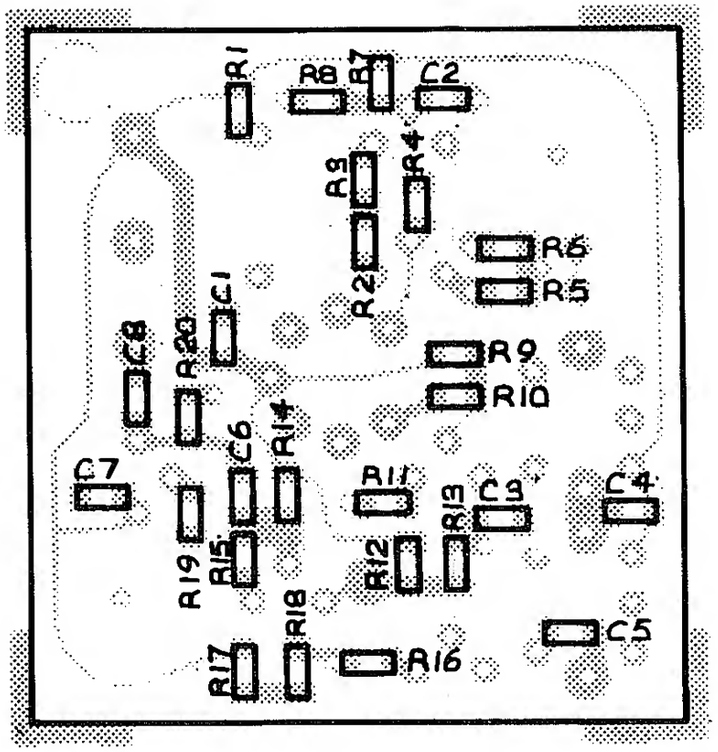

VIEWED FROM TRACK SIDE

Component Layout : Reference
Frequency Doubler Assembly 19-1238 Fig.16

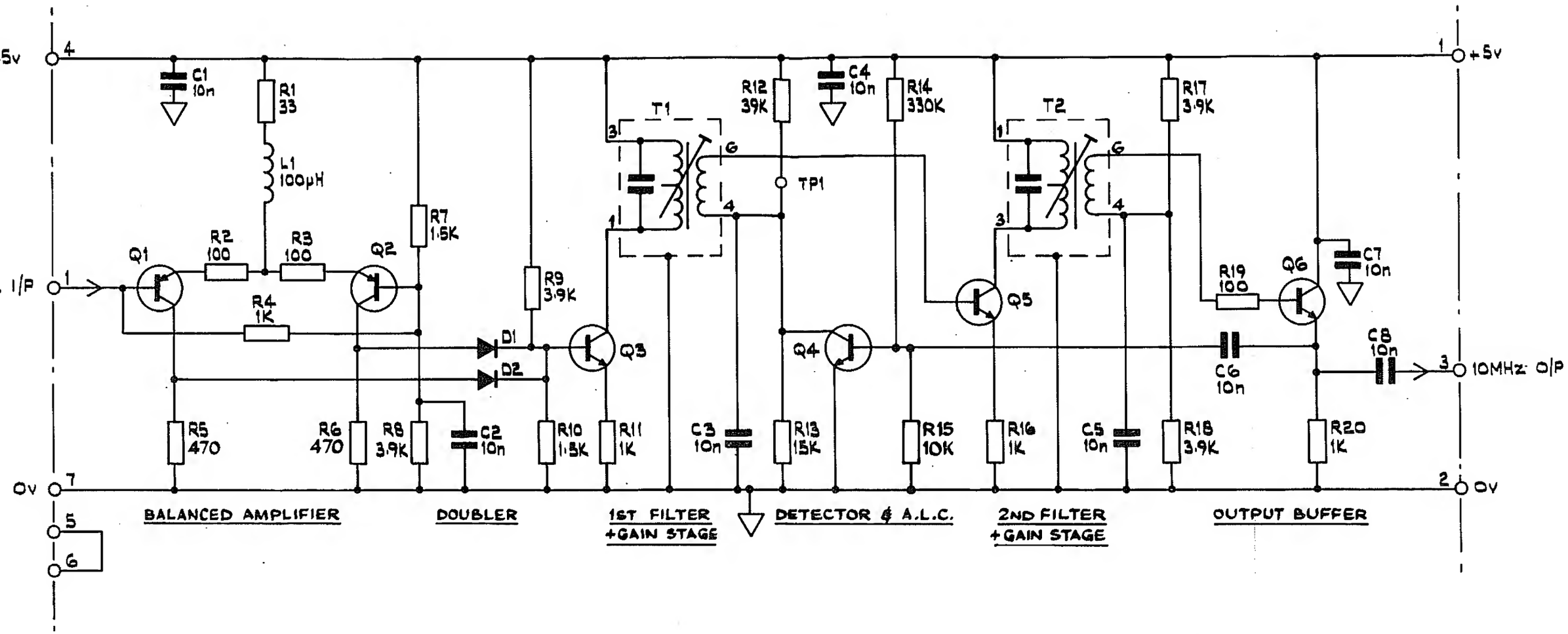

Circuit Diagram: Reference
Frequency Doubler Assembly 19-1238 Fig.17

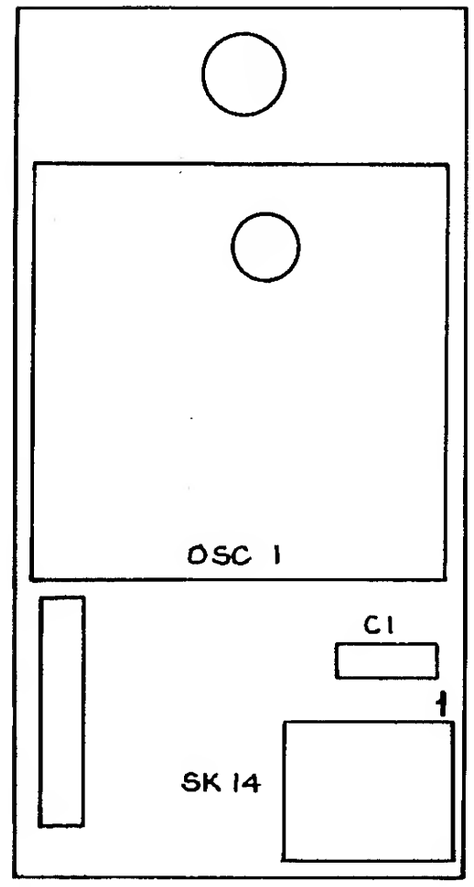

RACAL

TH 6284

1

Component Layout:
Oscillator Assembly 19-1208

Fig.18

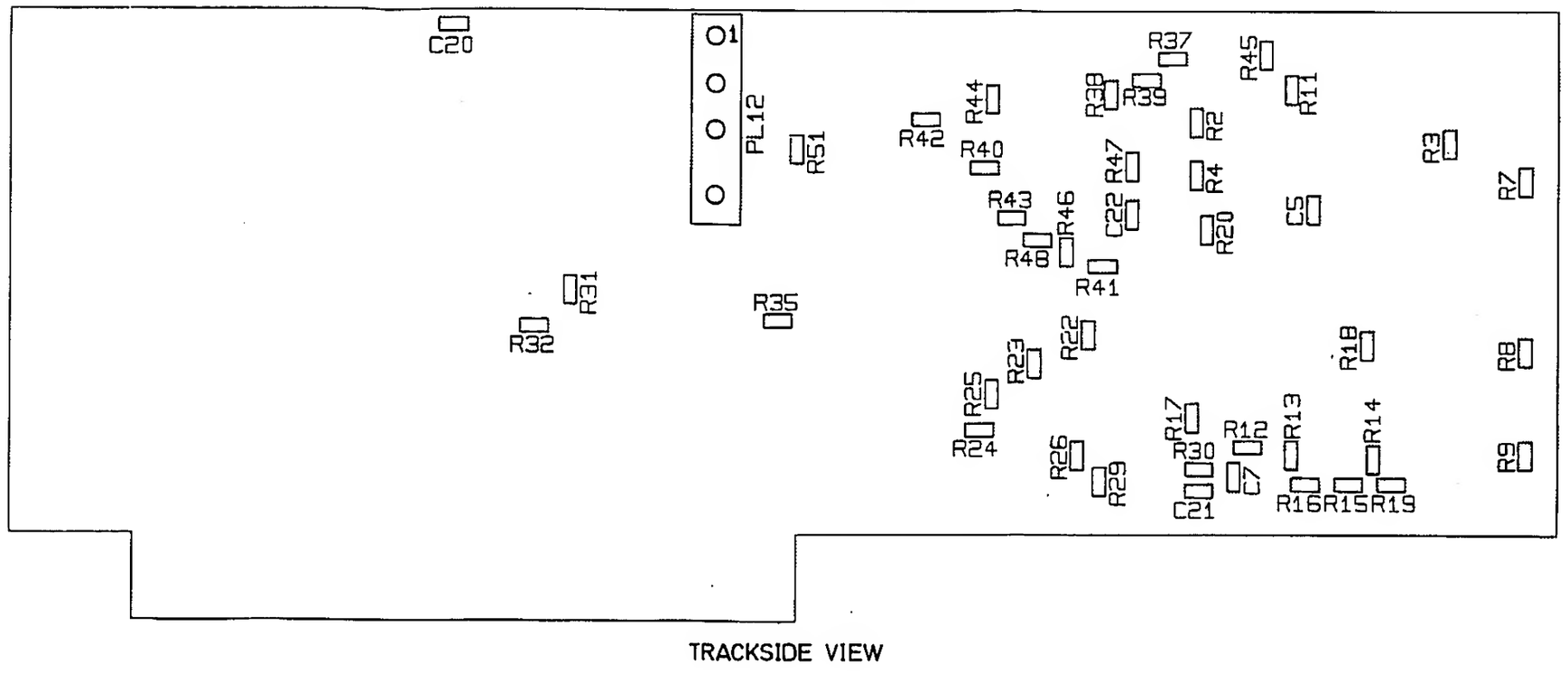

TRACKSIDE VIEW

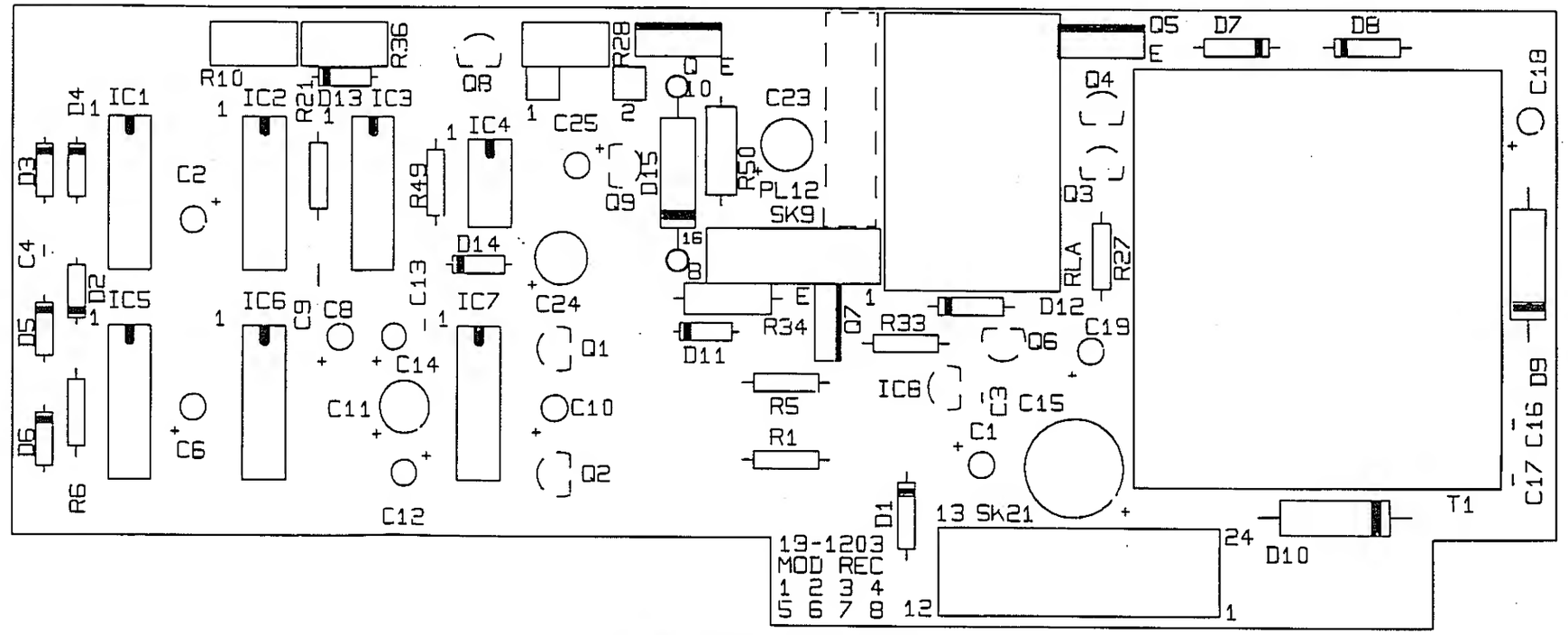

COMPONENT SIDE VIEW

Component Layout:
Battery Board Assembly 19-1203 Fig 19

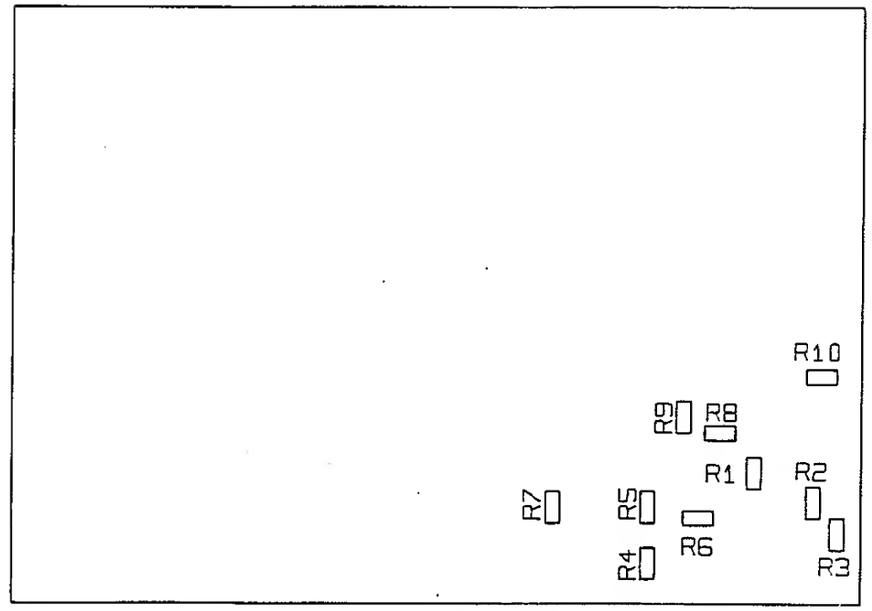

TRACKSIDE VIEW

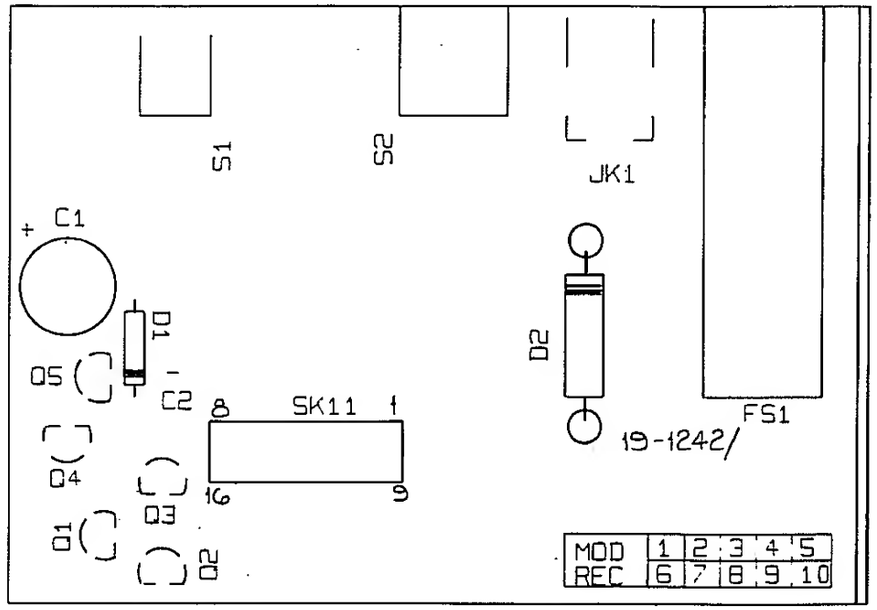

COMPONENT SIDE VIEW

RACAL

TH6428

1/

Component Layout :
Switch Board Assembly 19-1242

Fig. 20

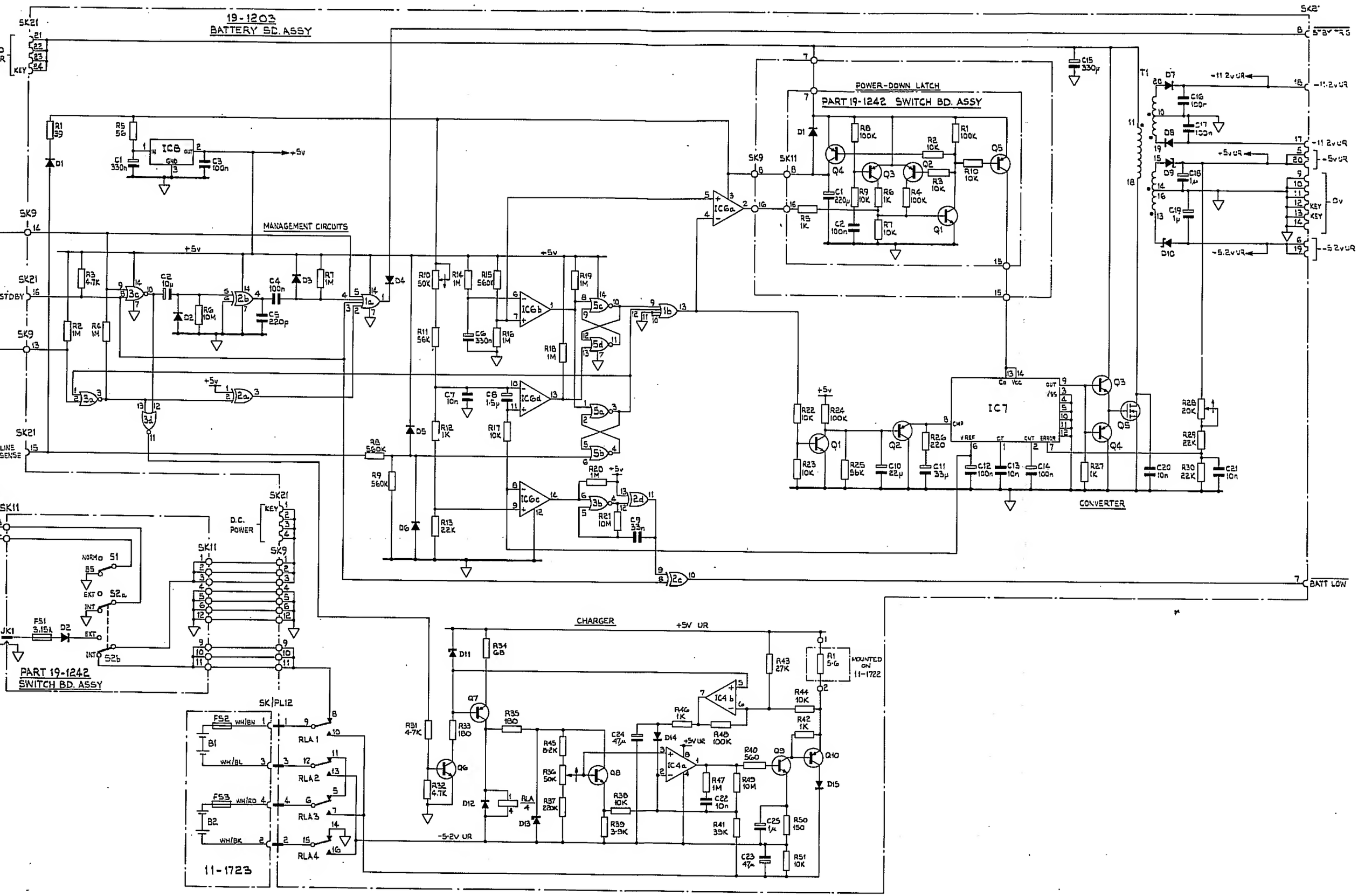

Circuit Diagram:
Battery Pack Assembly 11-1625 Fig.21

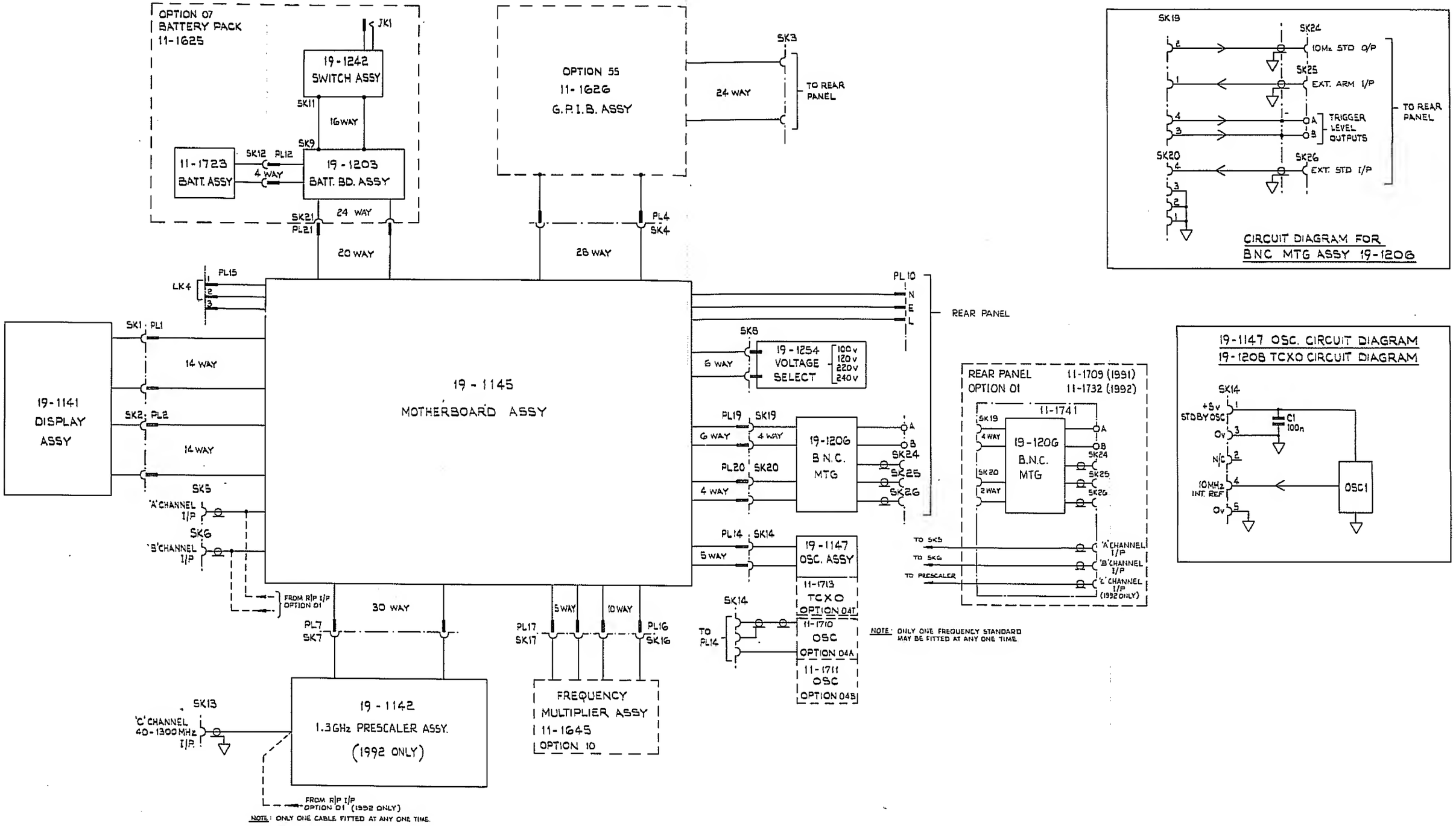

	PL1 PIN	SK1 PIN
	14	14
		13
	2	2
	6	6
	7	7
	5	5
	12	12
	1	1
	11	11
	8	8
OBE	4	4
	3	3

14 WAY	PL/SK 2 PIN
-5.2v	2
0v	8
+5v	10
KEYBOARD ENABLE	5
KEYBOARD DATA	4
KEYBOARD EXTEND	9
PB0	13
PB1	12
PB2	1
PB3	14
GATE	11
A TRIG	7
B TRIG	3
MODE 2	6

24 WAY	SK3 PIN
0v	12,18,19,20, 21,22,23,24
NRFD	7
ATN	11
DAV	6
SRQ	10
NDAC	8
REN	17
EOI	5
IFC	9
DIO1	1
DIO2	2
DIO3	3
DIO4	4
DIO5	13
DIO6	14
DIO7	15
DIO8	16

28 WAY	SK/PL 4 PIN
+5v	1,2,3,4
0v	25,26,27
RESET GPIB	28
5MHz CLOCK	24
GATE	21
GPIB OPT	15
B0	23
B1	10
B2	12
B3	14
B4	13
B5	11
B6	9
B7	8
A0	7
A1	6
A2	5
GPIB SEL	16
GPIB DATA IRQ	22
GPIB IRQ	18
R LED	20
A LED	17
S LED	19

4 WAY	PL/SK 12 PIN
BATTERY 1 0v	3
BATTERY 1 +6v	1
BATTERY 2 +6v	4
BATTERY 2 0v	2

30 WAY	PL7 PIN	SK7 PIN
+5v	23	23
-5.2v	6	6
0v	5,4,9,10, 15-17,24-29, 32-30	4, 19-22, 24-25, 28-30
1.3GHz	12	12
GATE	17	17
RESET	15	15
ST.SL or LL	16	16
C/G4	8	8
E/G4	7	7
C/OP	5	5
DET	14	14
C LOW	11	11
RST2	13	13
RST1	1	1
C FITTED	2	2

16 WAY	SK9,11 PIN
0v	4,5,6,12
NORM/BS	14
EXT/INT	13
POWER EXT/INT	1,2,3
BATTERY	9,10,11

5 WAY	PL/SK 14 PIN
+5v STDBY OSC	1
0v	3,5
10MHz INT. REF.	4

10 WAY	PL16 PIN	SK16 PIN
+5v STDBY OSC.	2	2
-1.3v	3	3
0v	1,4,7,10	1,4,7,10
EXT REF -	6	6
EXT REF +	9	9
EXT STD-		5
EXT STD+	8	8

5 WAY	PL/SK 17 PIN
+11.2v	3
-5.2v	2
0v	1,5
BYPASS	4

PL19 - 6 WAY SK19 - 4 WAY	PL19 PIN	SK19 PIN
10MHz STD O/P	2	2
EXT ARM	1	1
TRIG LEVEL A	5	4
TRIG LEVEL B	6	3
+5V	4	
-5.2V	3	

4 WAY	PL/SK 20 PIN
0v	1,2,3
EXT REF.	4

PL21 - 20 WAY SK21 - 21 WAY	PL 21 PIN	SK21 PIN
DC POWER	1,2,3	1,2,3,4
SWITCHED DC POWER	18,19,20	21-24
-5v UR	5,16	6,19
+5v UR	4,17	5,20
LINE SENSE	12	15
-11.2v UR	15	18
-11.2v UR	14	17
0v	6,9,10,11	9-14
STDBY	13	16
BATT LOW	6	7
STDBY TRIG	7	8

Interconnections

Fig.22